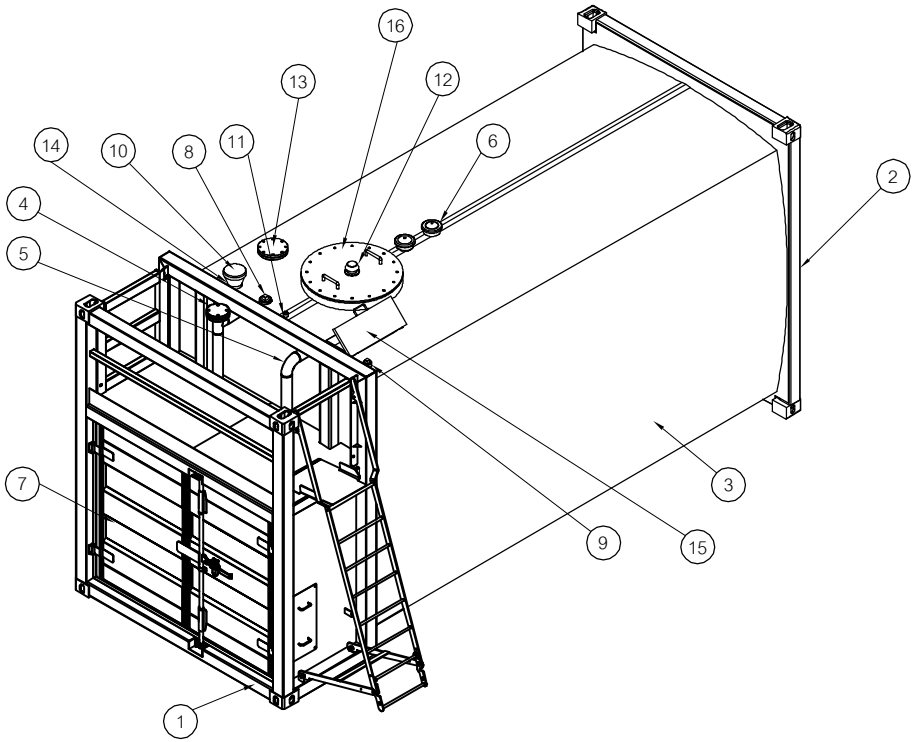

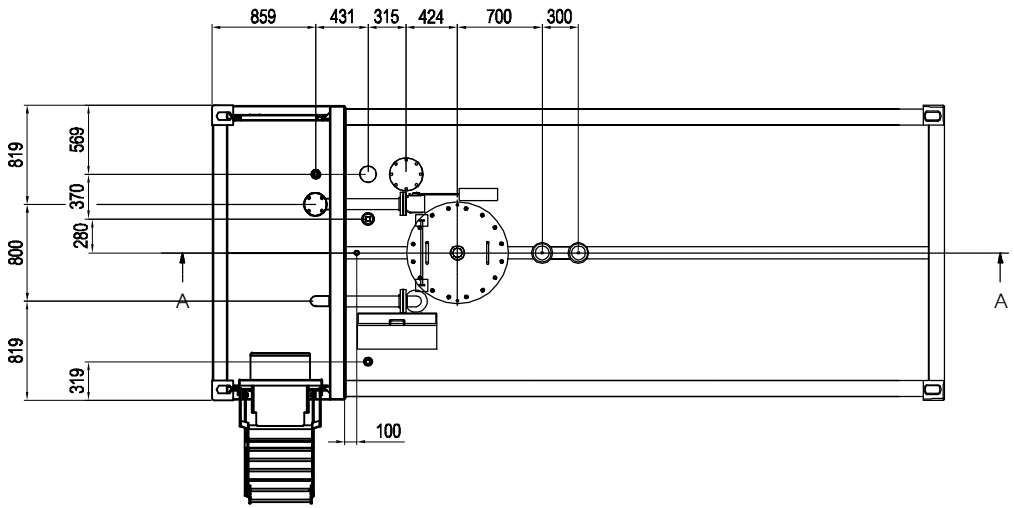

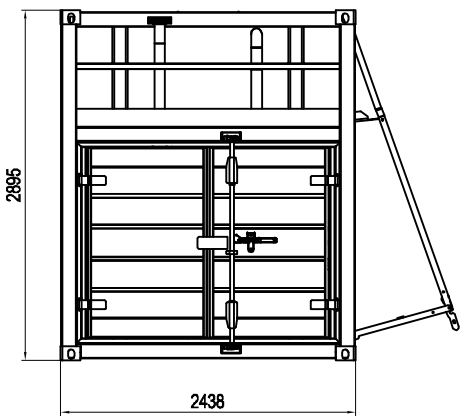

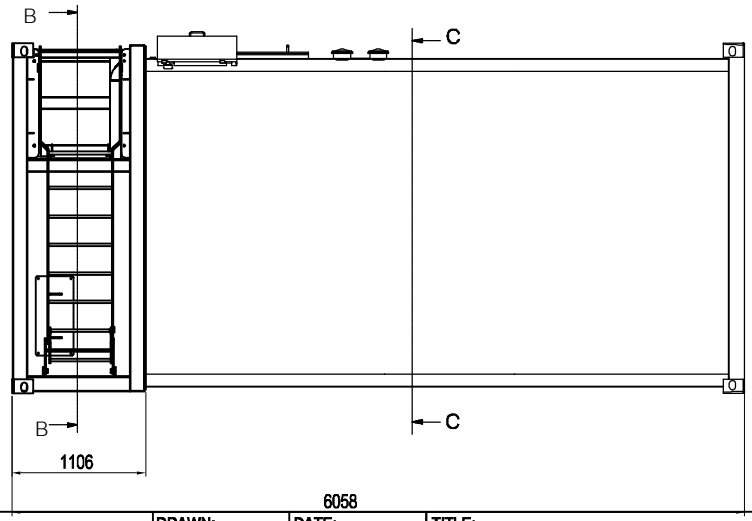

01	20/08/15	move pipe upper SFL line and main hole	N.Pramote		
REV:	DATE:	REVISION:	DRAWN:	CHECKED:	APPROVED:

PIRATE SMART·TANKS

CONFIDENTIAL

This document and all information contained within it remains the property of Petro Industrial PTY. LTD and specified parties deemed by Petro Industrial PTY. LTD. No part of this document may be copied without explicit consent of Petro Industrial PTY. LTD.

DRAWN:	DATE:
CHECKED:	DATE:
CLIENT:	DATE:
APPROVED:	DATE:

TITLE: X-Jumbo30000

DRAWING NO:

REV: 01

SHEET: 1/2

A3

PURCHASE ORDER NO:

SCALE: none scale

1	C500300001	Standard Pumping Bay 1	1	00
2	C500300002	Standard Pumping Bay 2	1	00
3	C037000002	Tank Assembly	1	00
4	C034010xxx	Suction Pipe Assembly	2	00
5	C034010xxx	Fill Pipe Assembly	2	00
6	XA222303012	4" Emergency Vent	2	00
7	C034010064	Container Door	2	00
8	XA212303015	3" Threaded Plug	1	00
9	XA212303012	2" Threaded Plug	3	00
10	XA222303013	Air Vent 3"	1	00
11	XA532309046	1" Threaded Plug	1	00
12	XA222303017	Roll Over Vent	1	00
13	XA040103024	6"150 ANSI FLANGE&PIPE 6"	1	00
14	XA212303091	3" Nipple	1	00
15	C034000012	Spill box	1	00
16	C037600010	Manway	1	00

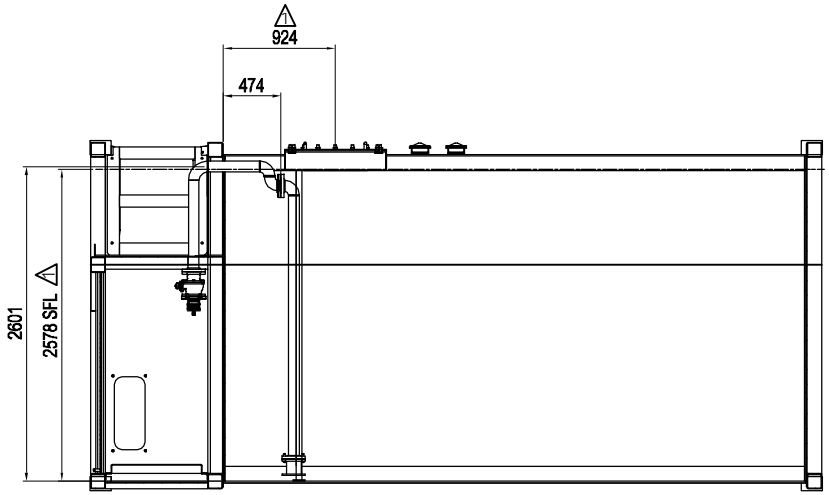

SECTION : A-A

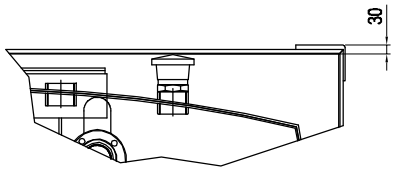

Detail : A

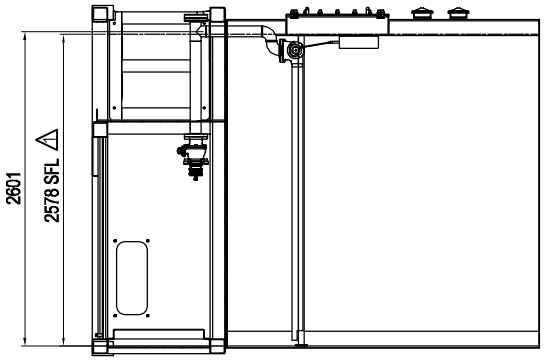

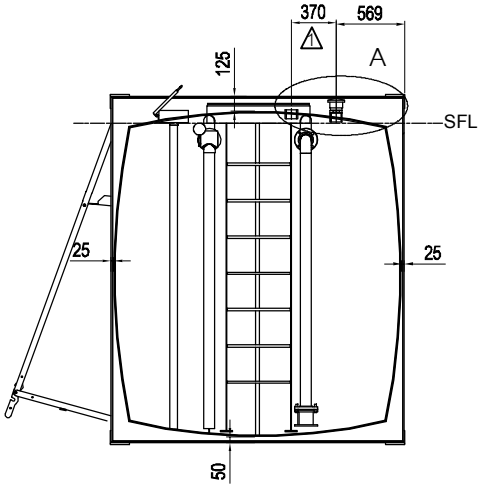

SECTION : C-C

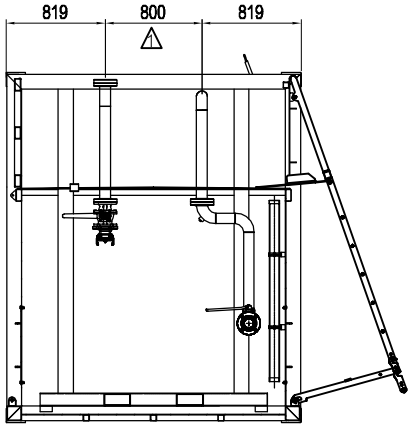

SECTION : B-B

01	20/08/15	move pipe upper SFL line and main hole	N.Pramote		
REV:	DATE:	REVISION:	DRAWN:	CHECKED:	APPROVED:

PIRATE SMART·TANKS

CONFIDENTIAL

This document and all information contained within it remains the property of Petro Industrial PTY. LTD and specified parties deemed by Petro Industrial PTY. LTD. No part of this document may be copied without explicit consent of Petro Industrial PTY. LTD.

DRAWN:	DATE:	TITLE: X-Jumbo30000	
CHECKED:	DATE:		
CLIENT:	DATE:	DRAWING NO:	REV: 01
APPROVED:	DATE:		SHEET: 2/2
		PURCHASE ORDER NO:	SCALE: none scale

A3